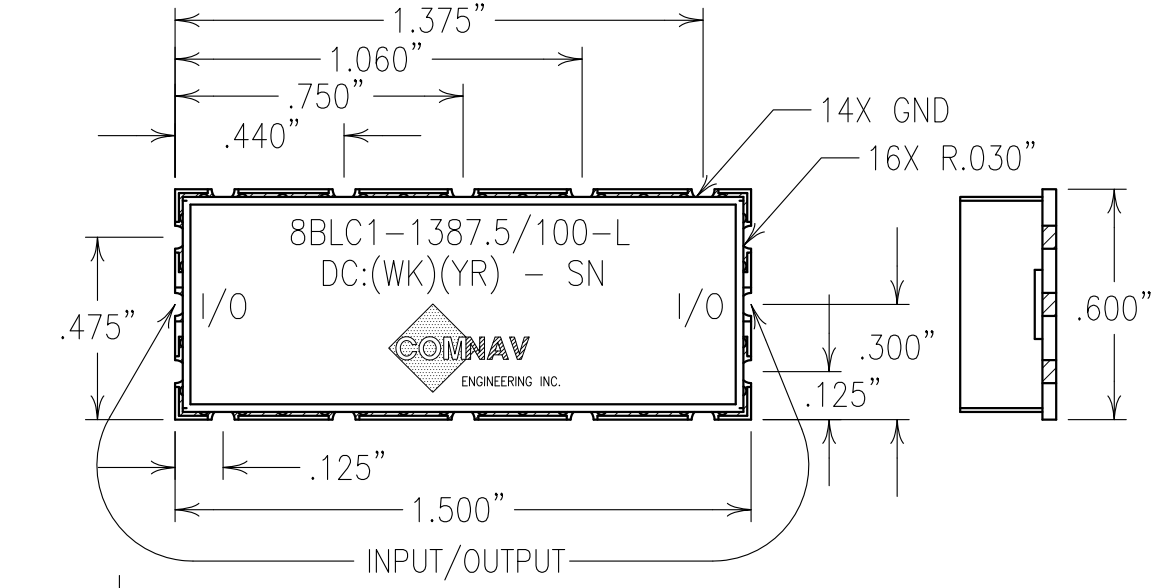

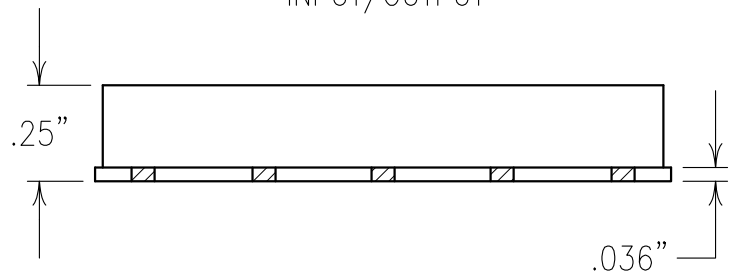

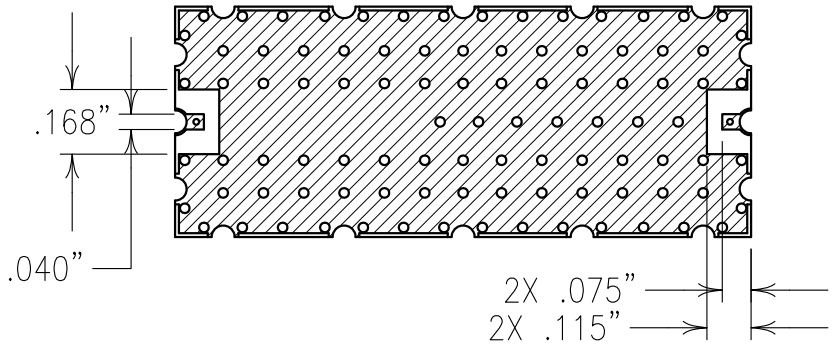

ELECTRICAL CHARACTERISTICS

CENTER FREQUENCY:	1387.5 MHz NOM
PASSBAND:	1164–1611 MHz
PASSBAND LOSS:	1.0 dB MAX
RETURN LOSS:	1.5:1 TYPICAL
REJECTION:	
50 dB MIN @ 600 MHz	
30 dB MIN @ 940 MHz	
30 dB MIN @ 1850 MHz	
50 dB MIN @ 2200 MHz	
POWER HANDLING: +18 dBm @ 1000 MHz	
OPERATING TEMP.: −40 TO +85°C	

COPY

NOTES:
FILTER IS ROHS COMPLIANT.

Confidential and Proprietary information of ComNav Engineering Inc. Do Not Duplicate or Use Without Permission. ComNav Engineering Inc. claims Copyright in this document as of the Creation, last revision, and last updated dates. All Rights Reserved.

A

ENGLISH / METRIC: ENGLISH	CHECKED BY				
TOLERANCES UNLESS OTHERWISE SPECIFIED	DRAWN BY: PBF				
MACHINED SURFACES TO BE 125 OR BETTER	ENGINEER: PBF	II	15APR15	KJR	DEV.	INI. ISS. PER 3907
REMOVE ALL BURRS		REV	DATE	BY	DCN No.	REMARKS
ENGLISH (INCHES): .XX ±.02, .XXX ±.010 — METRIC (MM): .X ±.25, .XX ±.13	SCALE 2:1	APPLIC: CERAMIC COAXIAL FILTER			
ANGLES ± 0° 30'	DATE 29APR15	TITLE: 8BLC1-1387.5/100-L			
COMNAV ENGINEERING INC.	FINISH: BOARD: NICKEL/GOLD JACKET: NICKEL/SILVER	DRAWING No. OL1502			SHEET 1 OF 1