Confidential and Proprietary information of ComNav Engineering Inc. Do Not Duplicate or Use Without Permission. ComNav Engineering Inc. claims Copyright in this document as of the Creation, last revision, and last updated dates. All Rights Reserved.

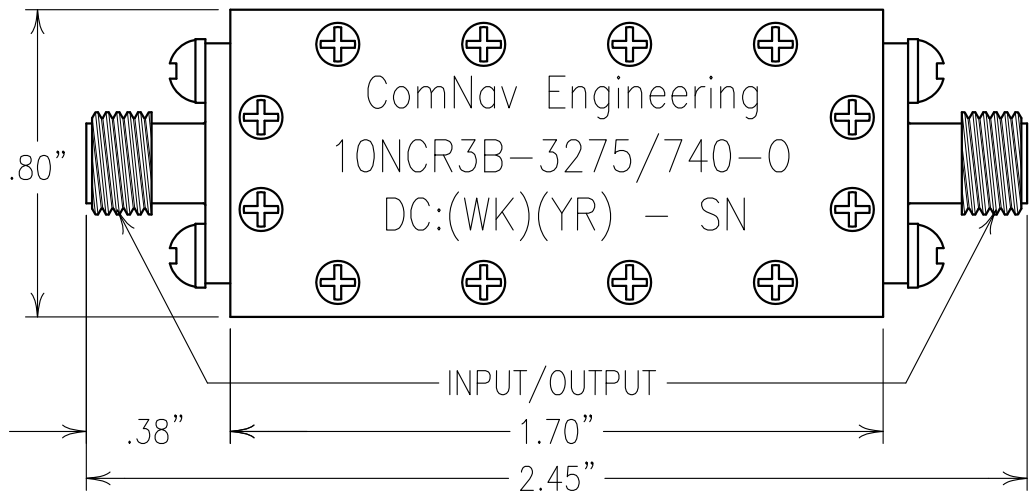

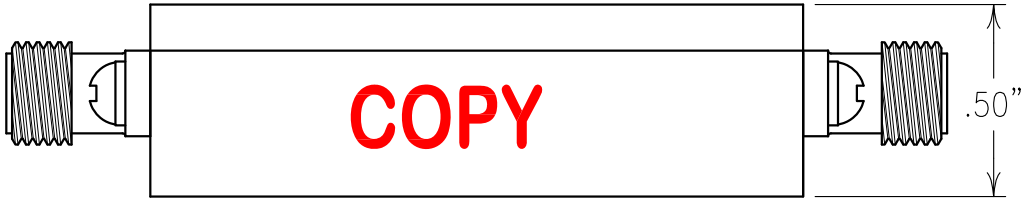

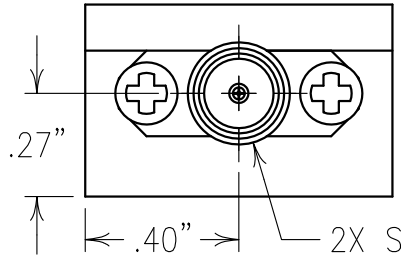

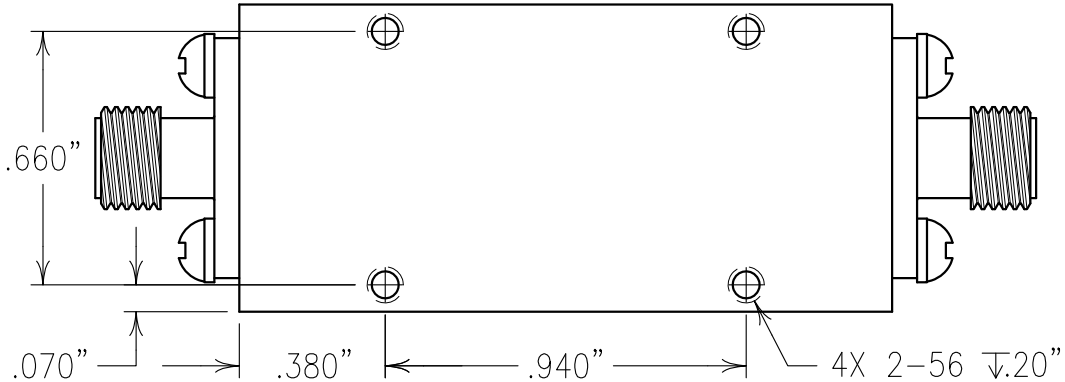

NOTES:

ELECTRICAL CHARACTERISTICS

CENTER FREQUENCY: 3275 MHz NOM
REJECTION BANDWIDTH: 3050-3500 MHz
LOWER PASSBAND: 1900-2850 MHz
UPPER PASSBAND: 3900-6100 MHz
INSERTION LOSS & RIPPLE (OVER TEMP. RANGE):
LOWER PASSBAND INSERTION LOSS: 2.0 dB MAX
UPPER PASSBAND INSERTION LOSS: 2.0 dB MAX
PASSBAND RIPPLE: 0.75 dB MAX PEAK TO PEAK
RETURN LOSS:
LOWER PASSBAND VSWR: 12.0 dB MIN
UPPER PASSBAND VSWR: 12.0 dB MIN
REJECTION @ BW (3050-3500): 60 dB MIN
MAX INPUT POWER @ PB'S:
MAX CW IP HANDLING IN PB: 25 dBm MIN
MAX PIP HANDLING IN PB: 0.25 KW iuSEC 0.1% DC
OPERATING TEMPERATURE: -20 TO +85°C
STORAGE TEMPERATURE: -40 TO +95°C
GROSS LEAK TEST @ +85°C FOR 60 SEC.

ENVIRONMENTAL SPECIFICATIONS (DESIGN TO MEET)

HUMIDITY: IAW MIL-STD-810F, METHOD 507.4
SALT SPRAY: IAW MIL-STD-202F, +EST, COND B
VIBRATION: IAW MIL-STD-167-1
MECHANICAL SHOCK: IAW MIL-STD-202F, METHOD 213B, COND B
THERMAL SHOCK: IAW MIL-STD-202F, METHOD 107D, COND A
FUNGUS: IAW MIL-STD-810FF, METHOD 508.5

ENGLISH / METRIC: ENGLISH	CHECKED BY					
TOLERANCES UNLESS OTHERWISE SPECIFIED MACHINED SURFACES TO BE 125 OR BETTER REMOVE ALL BURRS	DRAWN BY: PBF					
	ENGINEER: KJR	II	08MAY13	KJR	DEV.	INI. ISS. PER 3659
		REV	DATE	BY	DCN No.	REMARKS
ENGLISH (INCHES) .XX ±.02 .XXX ±.01 / METRIC (MM) .X ±.2 .XX ±.13	SCALE 2:1	APPLIC: CERAMIC FILTER				
ANGLES ± 0° 30'	DATE 13MAY13	TITLE: 10NCR3B-3275/740-0				SHEET OF 1 1
COMNAV ENGINEERING INC	MATERIAL: ALUMINUM					DRAWING No. OL1342
	FINISH: EPOXY PAINT					