COPY

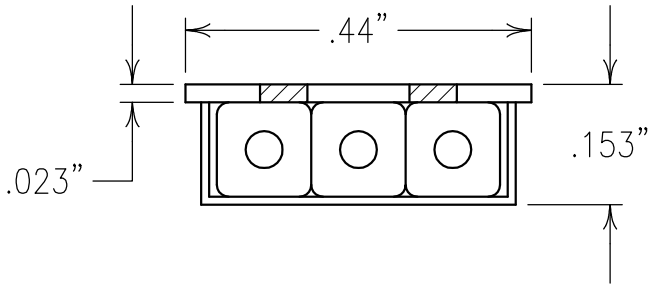

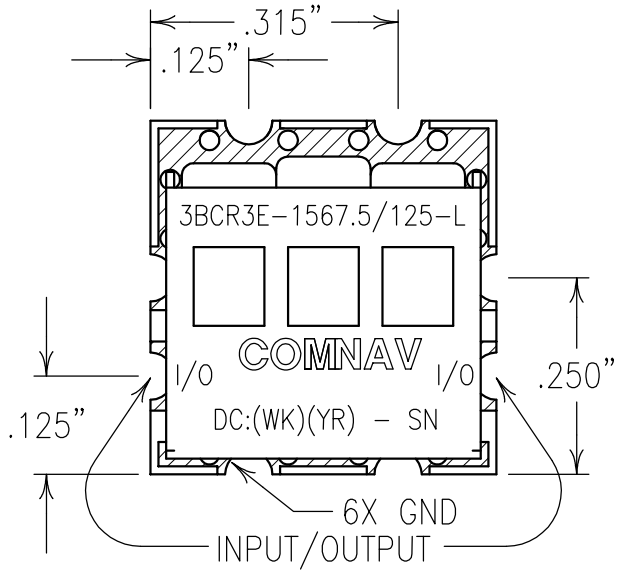

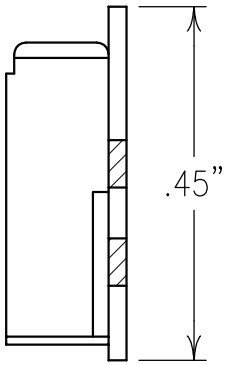

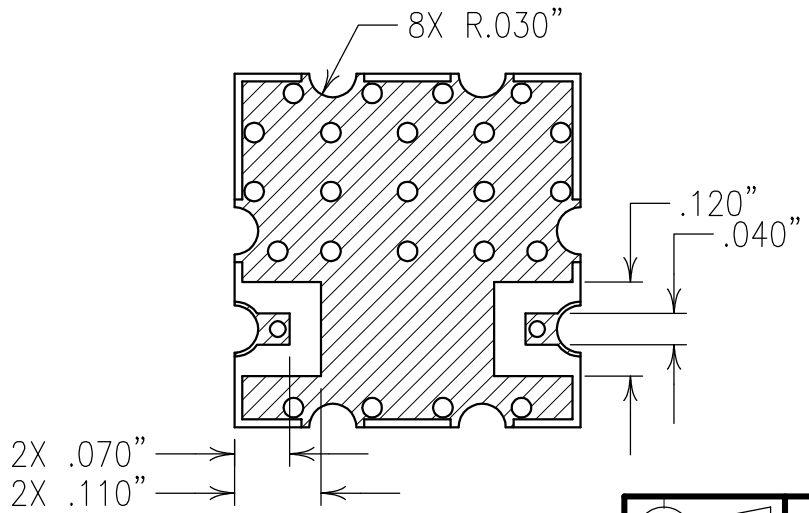

ELECTRICAL CHARACTERISTICS

CENTER FREQUENCY:	1567.5 MHz NOM.
PASSBAND:	1525–1610 MHz
3 dB BANDWIDTH:	125 MHz NOM
PASSBAND INSERTION LOSS:	<1.0 dB
PASSBAND FLATNESS:	<0.5 dB
PASBAND VSWR:	1.5:1 MAX.
REJECTION:	
1470 MHz:	>10 dBc
1700 MHz:	>15 dBc
1300 MHz:	>30 dBc
2000 MHz:	>35 dBc

Confidential and Proprietary information of ComNav Engineering Inc. Do Not Duplicate or Use Without Permission. ComNav Engineering Inc. claims Copyright in this document as of the Creation, last revision, and last updated dates. All Rights Reserved.

NOTES:

RECOMMENDED ATTACHMENT METHOD: SILVER EPOXY OR REFLOW NOT TO EXCEED AS INDICATED BELOW:

TEMP.(°C)	MAX.TIME(SEC)
215	90
230	60
245	30
260	15

FILTER IS ROHS COMPLIANT.
FILTER MAY BE ETCHED OR LABELED.

ENGLISH / METRIC: ENGLISH	CHECKED BY				
TOLERANCES UNLESS OTHERWISE SPECIFIED: MACHINED SURFACES TO BE 125 OR BETTER; REMOVE ALL BURRS	DRAWN BY: EEF				
	ENGINEER: KJR	II	16JUN09	KJR	DEV. — INI. ISS. PER 3006
		REV	DATE	BY	DCN No. — REMARKS
ENGLISH (INCHES): .XX ±.02, .XXX ±.010; METRIC (MM): .X ±.5, .XX ±.25	SCALE: 4:1	APPLIC: CERAMIC COAXIAL FILTER			
ANGLES ± 0° 30'	DATE: 17JUN09	TITLE: 3BCR3E-1567.5/125-L			
COMNAV ENGINEERING INC	FINISH: BOARD: NICKEL/GOLD PLATED COPPER; JACKET: NICKEL/SILVER; RESONATOR: SILVER	DRAWING No. OL1021			SHEET 1 OF 1