2 1

COPY

ELECTRICAL CHARACTERISTICS

CENTER FREQUENCY:	2680 MHz
PASSBAND:	2565–2795 MHz
PASSBAND INSERTION LOSS:	3 dB MAX
REJECTION:	
−40 dBc:	1000–2300 MHz
−40 dBc:	3100–3500 MHz
−25 dBc:	2300–2460 MHz
−25 dBc:	2925–3100 MHz
PASSBAND VSWR:	1.5:1 MAX
IMPEDANCE:	50 OHMS
IIP3:	+30 dBm MIN
TEMP:	−20° TO +70°C

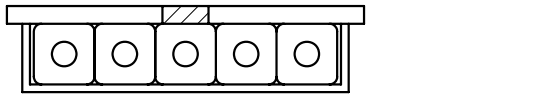

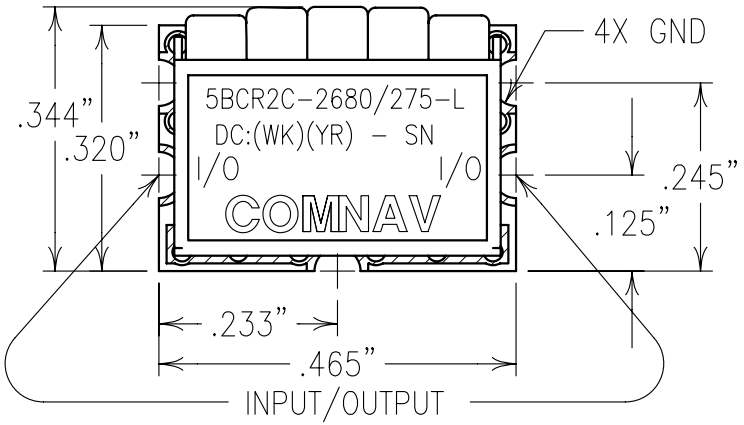

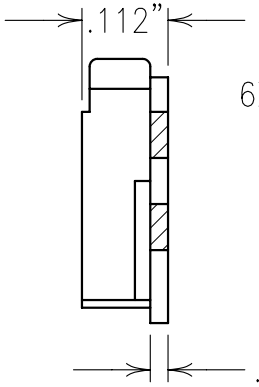

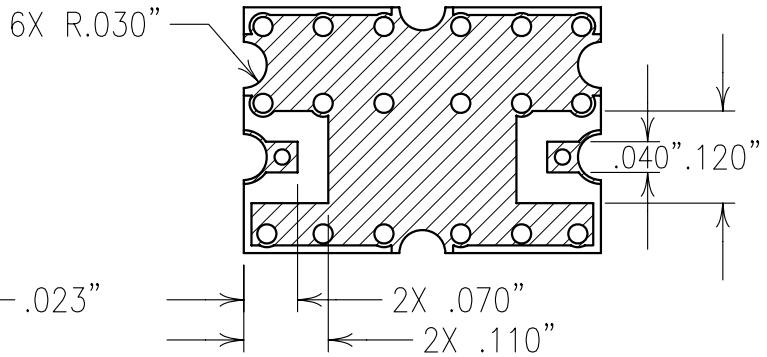

Confidential and Proprietary information of ComNav Engineering Inc. Do Not Duplicate or Use Without Permission. ComNav Engineering Inc. claims Copyright in this document as of the Creation, last revision, and last updated dates. All Rights Reserved.

A

NOTES:

RECOMMENDED ATTACHMENT METHOD: SILVER EPOXY OR REFLOW NOT TO EXCEED AS INDICATED BELOW:

TEMP.(°C)	MAX.TIME(SEC)
215	90
230	60
245	30
260	15

ENGLISH / METRIC: ENGLISH	CHECKED BY					
TOLERANCES UNLESS OTHERWISE SPECIFIED	DRAWN BY: PBF	A	12JUL05	GML	DEV.	GEN. REV. PER 2400
MACHINED SURFACES TO BE 125 OR BETTER	ENGINEER: GML	II	14APR05	GML	DEV.	INI. ISS. PER 2361
REMOVE ALL BURRS		REV	DATE	BY	DCN No.	REMARKS
ENGLISH (INCHES): .XX ±.01, .XXX ±.005 / METRIC (MM): .X ±.2, .XX ±.13	SCALE: 4:1	APPLIC: CERAMIC COAXIAL FILTER				
ANGLES ± 0° 30'	DATE: 14JUL05	TITLE: 5BCR2C-2680/275-L				
COMNAV ENGINEERING INC	FINISH: BOARD: NICKEL/GOLD, JACKET: NICKEL/SILVER	DRAWING No. OL0587				SHEET OF 1 1

A