COPY

ELECTRICAL CHARACTERISTICS

NOTCH FREQUENCY:	3750 ±5 MHz
NOTCH DEPTH:	>25 dBc
PASSBAND:	DC–3675 MHz
PASSBAND LOSS:	<1.0
PASSBAND VSWR:	1.5:1

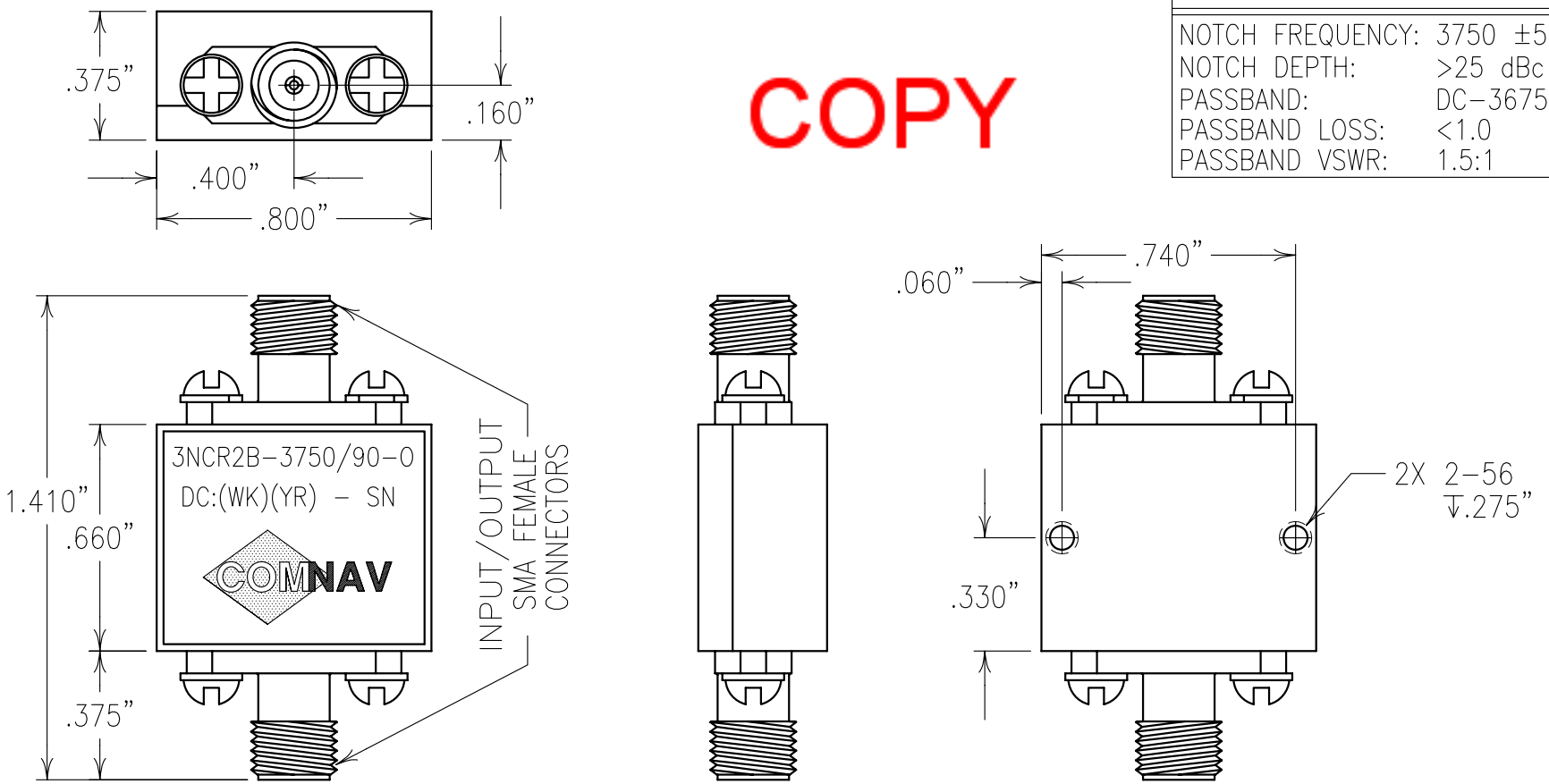

Confidential and Proprietary information of ComNav Engineering Inc. Do Not Duplicate or Use Without Permission. ComNav Engineering Inc. claims Copyright in this document as of the Creation, last revision, and last updated dates. All Rights Reserved.

NOTES:

ENGLISH / METRIC: ENGLISH	CHECKED BY				
TOLERANCES UNLESS OTHERWISE SPECIFIED: MACHINED SURFACES TO BE 125 OR BETTER; REMOVE ALL BURRS	DRAWN BY: PBF				
	ENGINEER: MJG	II	11FEB04	MJG	DEV.	INI. ISS. PER 2180
		REV	DATE	BY	DCN No.	REMARKS
ENGLISH (INCHES): .XX ±.01, .XXX ±.005 — METRIC (MM): .X ±.2, .XX ±.13	SCALE: 2:1	APPLIC: CERAMIC COAXIAL FILTER			
ANGLES ± 0° 30'	DATE: 17FEB04	TITLE: 3NCR2B–3750/90–0			
COMNAV ENGINEERING INC	MATERIAL: COVER: ALUMINUM, BASE: ALUMINUM; FINISH: COVER: NICKEL PLATE, BASE: NICKEL PLATE	DRAWING No. OL0519			SHEET OF 1 1