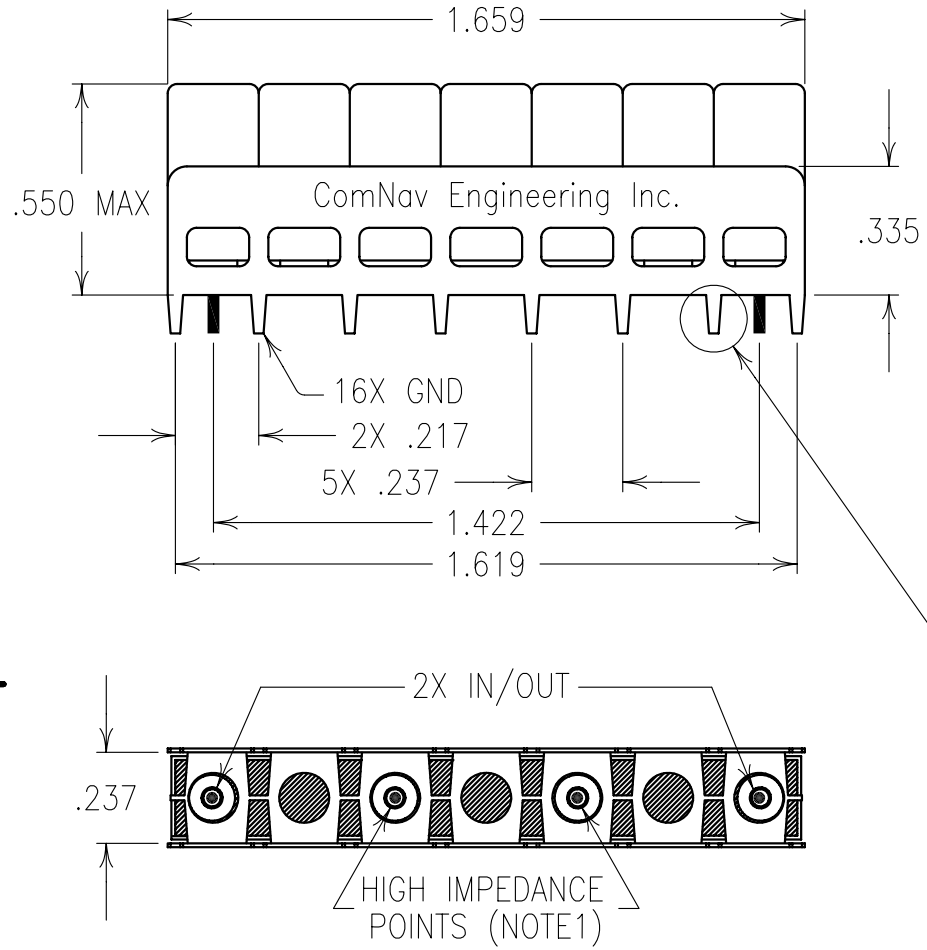

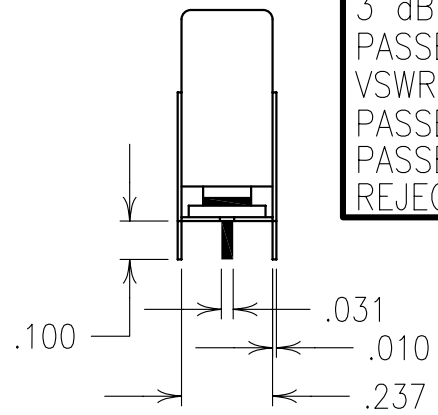

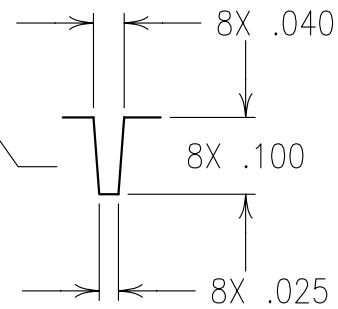

ELECTRICAL CHARACTERISTICS

CENTER FREQ. (fo):	2250 MHz
3 dB BANDWIDTH	125 MHz NOM.
PASSBAND:	2200–2300 MHz
VSWR:	<1.7:1
PASSBAND FLATNESS:	<1.0 dB
PASSBAND LOSS:	<2.5 dB
REJECTION:780 dB:	DC–2100 MHz

COPY

NOTES:

1) THERE MUST BE A MINIMUM OF .050 AIR SPACE BETWEEN GROUND AND HIGH IMPEDANCE POINTS.

THIS MAY BE ACCOMPLISHED BY RAISING THE FILTER OR DRILLING OUT THE BOARD.

Confidential and Proprietary information of ComNav Engineering Inc. Do Not Duplicate or Use Without Permission. ComNav Engineering Inc. claims Copyright in this document as of the Creation, last revision, and last updated dates. All Rights Reserved.

A

ENGLISH / METRIC: ENGLISH

TOLERANCES UNLESS OTHERWISE SPECIFIED
MACHINED SURFACES TO BE 125 OR BETTER
REMOVE ALL BURRS

ENGLISH (INCHES): .XX ±.02, .XXX ±.010
METRIC (MM): .X ±.5, .XX ±.25

ANGLES ± 0° 30'

CHECKED BY:
DRAWN BY: PBF
ENGINEER: MJG
SCALE: 2:1
DATE: 26NOV02

REV	DATE	BY	DCN No.	REMARKS
II	25NOV02	MJG	DEV.	INI. ISS. PER 1978

APPLIC: CERAMIC COAXIAL FILTER

TITLE: 7BCR6B–2250/C125–D

COMNAV ENGINEERING INC

FINISH:
BOARD: Sn63Pb37 PLATED COPPER
JACKET: NI/SILVER
RESONATOR: SILVER

DRAWING No. OL0440

SHEET 1 OF 1