2 1

CNE PART #
3BCR4A-5246/425-L
3BCR4A-5463/425-L
3BCR4A-5679/425-L

ELECTRICAL CHARACTERISTICS

CENTER FREQUENCY fo(*)	(NOTE 1)	fo=5246 MHz REJECTION:	
3.0 dB BANDWIDTH	425 MHz	4679 & 5940 MHz	25 dB
1 dB BANDWIDTH	341 MHz MIN	6780 MHz	37 dB
LOSS @ fo(*)	<1.5 dB	fo=5463 MHz REJECTION:	
VSWR	1.7:1 TYP	4808 & 6232 MHz	20 dB
PHASE LIN.	<±3° ACROSS 1dB BANDWIDTH	6972 MHz	35 dB
ULTIMATE ATTEN.	45 dB @ 840 & 7700 MHz	fo=5679 MHz REJECTION:	
		5078 & 6373 MHz	25 dB
		7216 MHz	37 dB

B

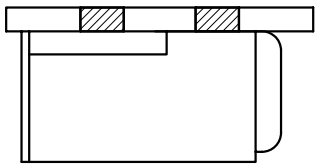

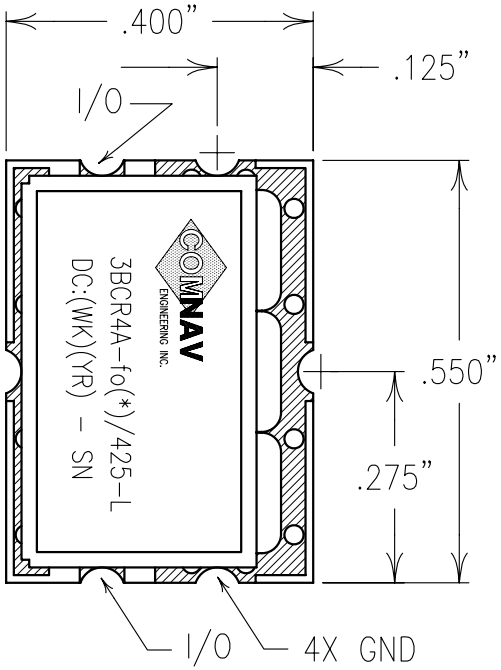

COPY

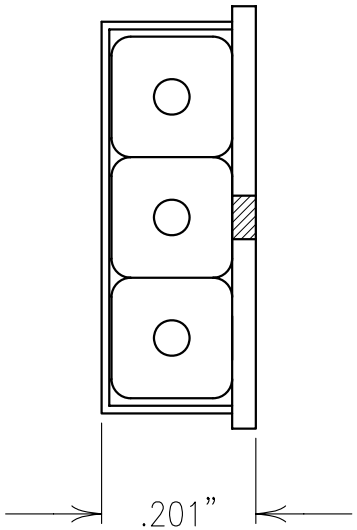

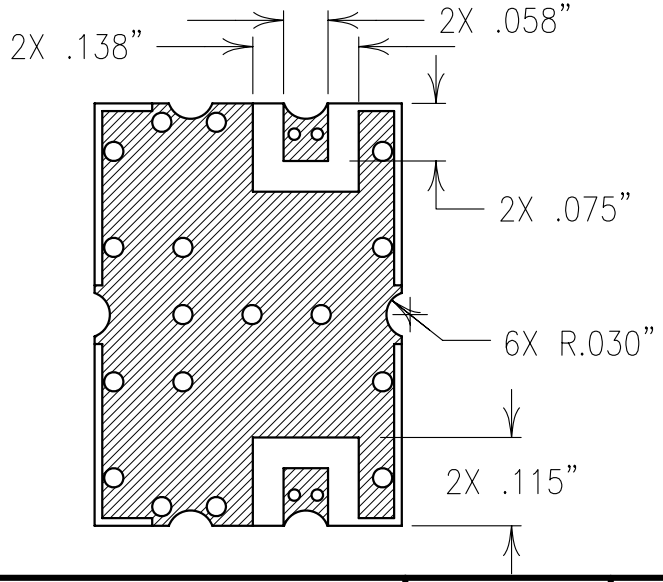

Confidential and Proprietary information of ComNav Engineering Inc. Do Not Duplicate or Use Without Permission. ComNav Engineering Inc. claims Copyright in this document as of the Creation, last revision, and last updated dates. All Rights Reserved.

A

NOTES:

1) CENTER FREQUENCY(fo) WILL BE IN THE RANGE: SPECIFIED BY THE CUSTOMER AS fo IN THE PART NUMBER AT TIME OF ORDER.

FOR RECOMMENDEDED FOOTPRINT SEE FP0007.

ENGLISH / METRIC: ENGLISH	CHECKED BY				
TOLERANCES UNLESS OTHERWISE SPECIFIED	DRAWN BY: RME				
MACHINED SURFACES TO BE 125 OR BETTER	ENGINEER: KJR	II	28FEB01	KJR	DEV.	INI. ISS. PER 1573
REMOVE ALL BURRS		REV	DATE	BY	DCN No.	REMARKS
ENGLISH (INCHES): .XX ±.02, .XXX ±.01 / METRIC (MM): .X ±.25, .XX ±.13	SCALE: 4:1	APPLIC: CERAMIC COAXIAL FILTER			
ANGLES ± 0° 30'	DATE: 04APR01	TITLE: 3BCR4A-fo(*)/425-L			SHEET NO/OF 1 1
COMNAV ENGINEERING INC.	FINISH: CARRIER BOARD:TIN PLATED COPPER, JACKET:NI/SILVER, RESONATOR:SILVER	DRAWING No. OL0315			

A