Fo	COMNAV PART NO.	CUSTOMER PART NO.	MAX. HEIGHT
2660 MHz	6BCR6A-2660/100-D	–	.492"
2700 MHz	6BCR6A-2700/100-D	–	.487"
2850 MHz	6BCR6A-2850/100-D	–	.466"
2910 MHz	6BCR6A-2910/100-D	–	.459"
2950 MHz	6BCR6A-2950/100-D	–	.454"

ELECTRICAL CHARACTERISTICS

CENTER FREQUENCY fo(*)	2660, 2700, 2850, 2910, 2950 MHz
3dB BANDWIDTH	100 MHz NOM.
1dB BANDWIDTH	80 MHz ±10 MHz
LOSS AT fo(*)	<3.0 dB
PASSBAND FLATNESS	1 dB
VSWR	1.7:1 TYP
REJECTION:	
fo(*) ± 100MHz	30 dB MIN.
fo(*) ± 200 MHz	65 dB MIN.
fo(*) ± 400 MHz	80 dB MIN.
IMPEDANCE	50 OHMS
GROUP DELAY VAR (fo ± 25 MHz)	<3.0 NSEC
OPERATING TEMP.	-40 – 85C

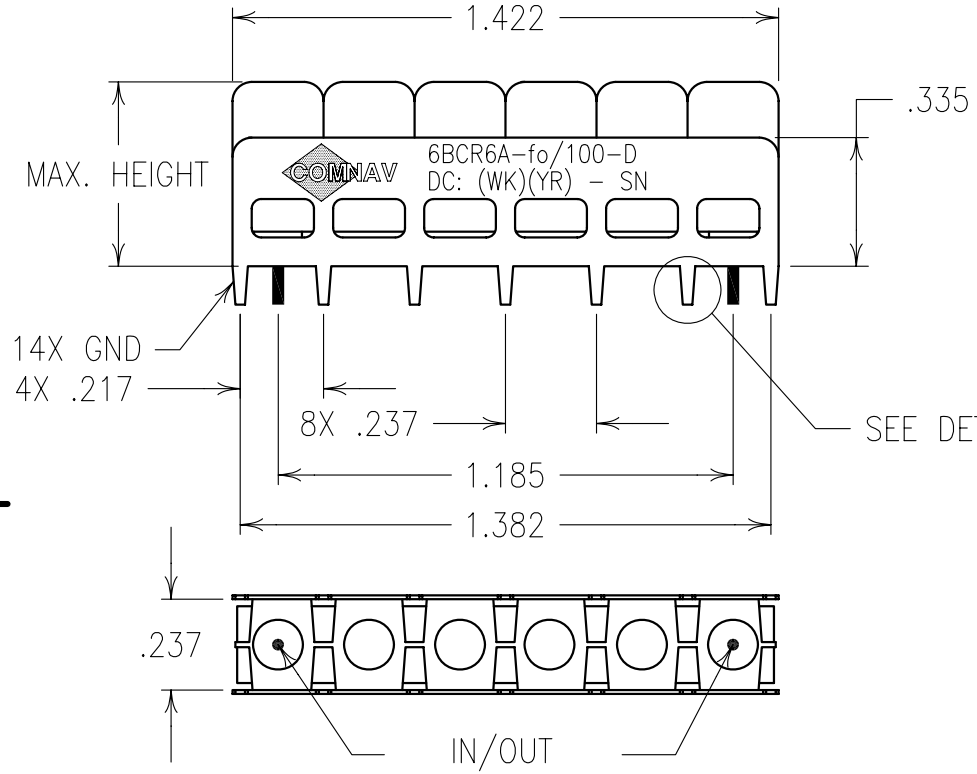

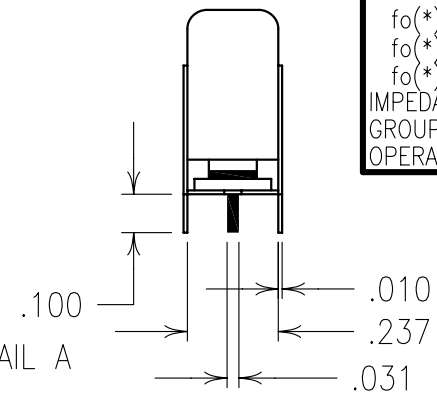

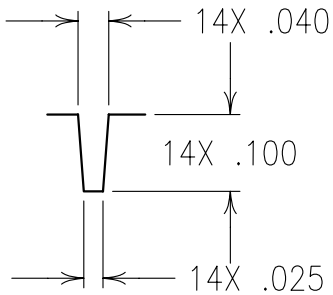

DETAIL A
SCALE 4:1

COPY

Confidential and Proprietary information of ComNav Engineering Inc. Do Not Duplicate or Use Without Permission. ComNav Engineering Inc. claims Copyright in this document as of the Creation, last revision, and last updated dates. All Rights Reserved.

A

NOTES:

MAX REFLOW TEMP. 240°C FOR 30 SEC., OR 260°C FOR 15 SEC.

FOR RECOMMENDED FOOTPRINT SEE FP0043.

ENGLISH / METRIC: ENGLISH	CHECKED BY				
TOLERANCES UNLESS OTHERWISE SPECIFIED; MACHINED SURFACES TO BE 125 OR BETTER; REMOVE ALL BURRS	DRAWN BY: RME	A	05JUN01	SWB	DEV.	GEN. REV. PER 1646
	ENGINEER: SWB	II	08SEP00	SWB	DEV.	INI. ISS. PER 1321
ENGLISH (INCHES): .XX ±.02, .XXX ±.010 / METRIC (MM): .X ±.25, .XX ±.13	SCALE: 2:1	REV	DATE	BY	DCN No.	REMARKS
ANGLES ± 0° 30'	DATE: 11JUN01	APPLIC: CERAMIC COAXIAL FILTER				
COMNAV ENGINEERING INC.		TITLE: 6BCR6A-fo/100-D				SHEET NO/OF 1 1
	FINISH: JACKET: NI/SILVER; RESONATORS: SILVER; PINS: TIN PLATED BRASS	DRAWING No. OL0264				