COMNAV PART#	CUSTOMER PART#	MAX. HEIGHT
6BCR6B-1650/C100-D	–	0.485"
6BCR6B-1710/C100-D	–	0.469"
6BCR6B-1750/C100-D	–	0.459"
6BCR6B-1900/C100-D	–	0.435"
6BCR6B-2000/C100-D	–	0.425"

ELECTRICAL CHARACTERISTICS

CENTER FREQUENCY fo(*)	1650, 1710, 1750, 1900, 2000
3dB BANDWIDTH	100 MHz
1dB BANDWIDTH	80 ± 10 MHz
LOSS@fo(*)	<3dB
PASSBAND FLATNESS	1dB WITHIN fo(*) ± 30 MHz
REJECTION:	
fo(*)± 200MHz	60dB
fo(*)± 400MHz	80dB
VSWR	1.7:1 INTO 50 OHM
GROUP DELAY VAR:	fo(*) ± 25 MHz <3.0 nsec
OPERATING TEMP.	-40 TO 85C

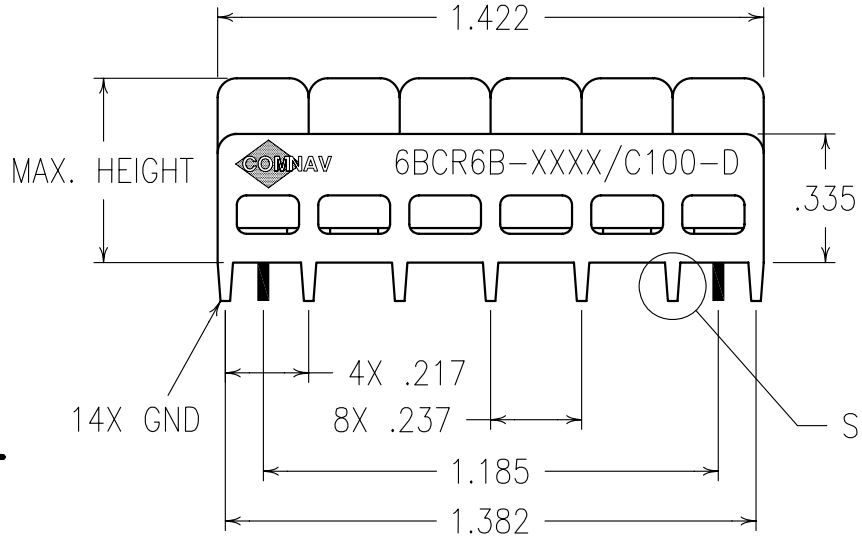

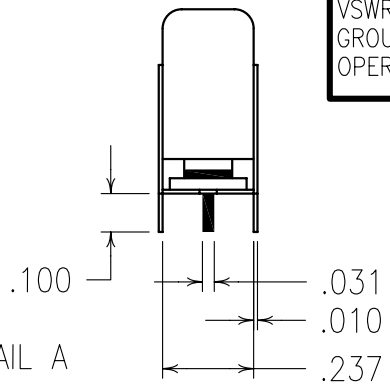

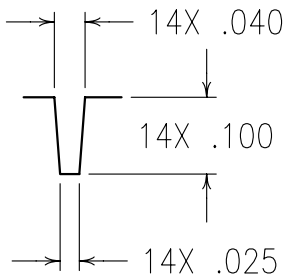

DETAIL A
SCALE 4:1

COPY

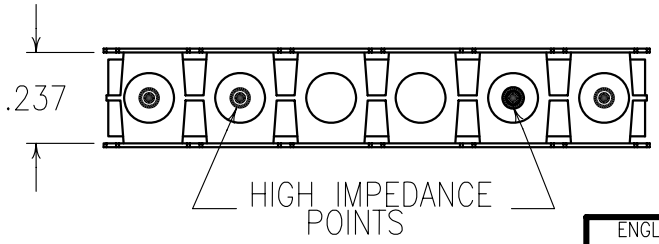

Confidential and Proprietary information of ComNav Engineering Inc. Do Not Duplicate or Use Without Permission. ComNav Engineering Inc. claims Copyright in this document as of the Creation, last revision, and last updated dates. All Rights Reserved.

A

NOTES:

FILTER IS A BI-DIRECTIONAL CROSS--COUPLED DESIGN.

MAX REFLOW TEMP. 240°C FOR 30 SEC., OR 260°C FOR 15 SEC.

FOR RECOMMENDED FOOTPRINT SEE FP0013.

ENGLISH / METRIC	ENGLISH
TOLERANCES UNLESS OTHERWISE SPECIFIED	MACHINED SURFACES TO BE 125 OR BETTER; REMOVE ALL BURRS
ENGLISH (INCHES)	.XX ±.02; .XXX ±.010
METRIC (MM)	.X ±.25; .XX ±.13
ANGLES	± 0° 30'
CHECKED BY	
DRAWN BY	RME
ENGINEER	SWB
SCALE	2:1
DATE	11JUN01

REV	DATE	BY	DCN No.	REMARKS
B	05JUN01	SWB	DEV.	GEN. REV. PER 1646
A	01DEC00	KJR	DEV.	GEN. REV. PER 1430
II	06SEP00	SWB	DEV.	INI. ISS. PER 1310

APPLIC: CERAMIC COAXIAL FILTER

TITLE: 6BCR6B-fo(*)/C100-D

SHEET NO/OF 1 1

COMNAV ENGINEERING INC.

FINISH:
JACKET: NI/SILVER
RESONATOR: SILVER
PINS: TIN PLATED BRASS

DRAWING No. OL0260