ELECTRICAL CHARACTERISTICS	
Center Frequency(fo*):	3000–3700 MHz
3 dB Bandwidth:	45 MHz min.
LOSS @ fo:	< 3.0 dB
VSWR:	1.7:1 typ.
25 dB REJECTION:	fo ±80 MHz

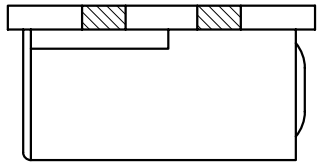

COPY

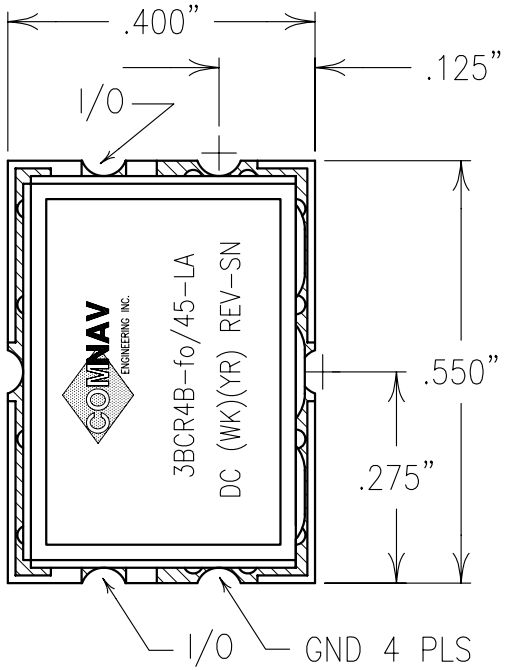

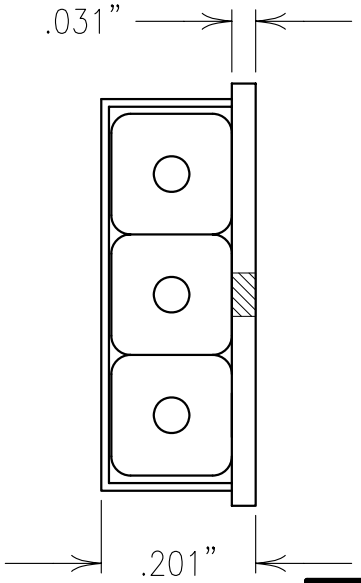

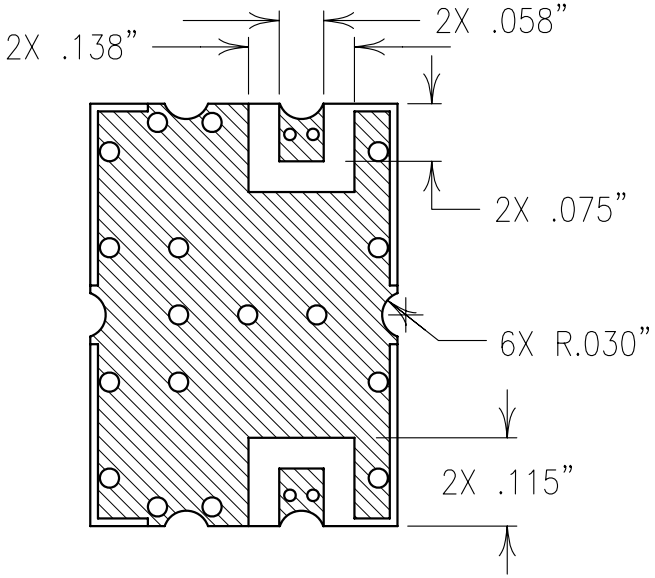

Confidential and Proprietary information of ComNav Engineering Inc. Do Not Duplicate or Use Without Permission. ComNav Engineering Inc. claims Copyright in this document as of the Creation, last revision, and last updated dates. All Rights Reserved.

A

NOTES:

1)CENTER FREQUENCY(fo) WILL BE IN THE RANGE: 3000–3700 MHz, AS SPECIFIED BY THE CUSTOMER AS fo IN THE PART NUMBER AT TIME OF ORDER.

2)FOR RECOMMENDED FOOTPRINT SEE FP0007.

3)RECOMMENDED ATTACHMENT METHOD: SILVER EPOXY OR REFLOW NOT TO EXCEED AS INDICATED BELOW:

TEMP.(°C)	MAX.TIME(SEC)
215	90
230	60
245	30
260	15

ENGLISH / METRIC: ENGLISH	CHECKED BY					
TOLERANCES UNLESS OTHERWISE SPECIFIED	DRAWN BY: RME	A	09JUL01	RME	DEV.	GEN. REV. PER 1692
MACHINED SURFACES TO BE 125 OR BETTER	ENGINEER: SWB	II	19JUN00	KJR	DEV.	INI. ISS. PER 1209
REMOVE ALL BURRS		REV	DATE	BY	DCN No.	REMARKS
ENGLISH (INCHES) .XX ±.02 .XXX ±.010 / METRIC (MM) .X ±.25 .XX ±.13	SCALE 4:1	APPLIC: CERAMIC COAXIAL FILTER				
ANGLES ± 0° 30'	DATE 14AUG01	TITLE: 3BCR4B-fo/45-LA				
COMNAV ENGINEERING INC	FINISH: BOARD: NI/AU PLATED COPPER; JACKET: NI/SILVER; RESONATOR: SILVER	DRAWING No. OL0243				SHEET 1 OF 1